TRIDONIC

Driver LC 34W 650-800mA flexC T SNC3

essence in-track series (3-phase system)

Black (RAL 9005)

White (RAL 9010)

Grey (RAL 7035)

Product description

_ Constant current / in-track LED driver
_ Optional accessory ACU ALU NIPPLE M10x1 for mounting the luminaire head
_ Compatible 3-phase system in-tracks, see data sheet chapter 3.8
_ For luminaires of protection class II
_ BIS approval mark for the white and black versions only
_ Temperature protection as per EN 61347-2-13 C5e
_ Selectable fixed output current via DIP switch 800, 750, 700 and 650 mA (pre-selected current 650 mA)
_ Max. output power 33.6 W
_ Up to 87.5 % efficiency
_ Nominal lifetime up to 100,000 h
_ 5 years guarantee (conditions at https://www.tridonic.com/manufacturer-guarantee-conditions)

Housing properties

_ Casing: polycarbonate, black, white or grey
_ Type of protection IP20

Functions

_ Overload protection
_ Short-circuit protection
_ No-load protection

Typical applications

_ For spot light in retail and hospitality application

Website

http://www.tridonic.com/87501151

Spotlights

Downlights

Linear

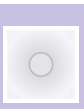

Area

Floor | Wall

Free-standing

Street

Decorative

High bay

Driver LC 34W 650-800mA flexC T SNC3

essence in-track series (3-phase system)

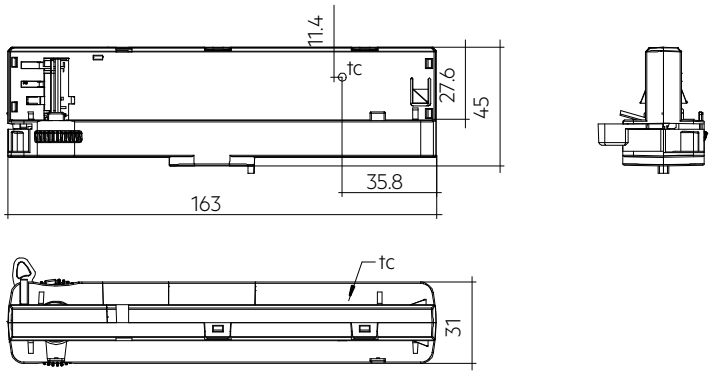

Ordering data

Type	Article number	Colour	Packaging, carton	Packaging, low volume	Packaging, high volume	Weight per pc.
LC 34/650-800/42 flexC T-B SNC3	**87501151**	Black	10 pc(s).	50 pc(s).	850 pc(s).	0.102 kg
LC 34/650-800/42 flexC T-W SNC3	**87501155**	White	10 pc(s).	50 pc(s).	850 pc(s).	0.102 kg
LC 34/650-800/42 flexC T-G SNC3	**87501159**	Grey	10 pc(s).	50 pc(s).	850 pc(s).	0.102 kg

Technical data

Rated supply voltage	220 – 240 V
AC voltage range	198 – 264 V
Max. input current (at 230 V, 50 Hz, full load)	0.17 A
Leakage current (at 230 V, 50 Hz, full load)	< 450 µA
Touch current (equipotential connected) ①	< 450 µA
Mains frequency	50 / 60 Hz
Overvoltage protection	320 V AC, 48 h
Typ. power consumption (at 230 V, 50 Hz, full load)	39 W
Min. output power	15.6 W
Max. output power	33.6 W
Typ. efficiency (at 230 V, 50 Hz, full load)	87.5 %
λ (at 230 V, 50 Hz, full load)	0.96
Output current tolerance ②	± 7.5 %
Max. output current peak ③	903 mA
Max. output voltage (U-OUT)	60 V
THD (at 230 V, 50 Hz, full load)	< 15 %
Output LF current ripple (< 120 Hz) ②	± 5 %
Output P_ST_LM (at full load)	≤ 1
Output SVM (at full load)	≤ 0.4
Starting time (at 230 V, 50 Hz, full load)	< 0.5 s
Turn off time (at 230 V, 50 Hz, full load)	≤ 0.5 s
Hold on time at power failure (output)	0 s
Ambient temperature ta (at lifetime 50,000 h)	35 °C
Storage temperature ts	-40 ... +80 °C
Mains surge capability (between L - N)	1 kV
Mains surge capability (between L/N - PE)	2 kV
Surge voltage at output side (against PE)	< 3.5 kV
Lifetime	up to 100,000 h
Guarantee (conditions at www.tridonic.com)	5 Year(s)
Dimensions L x W x H	163 x 31 x 45 mm

Approval marks

IP20 SELV RoHS

Standards

EN 55015, EN 61000-3-2, EN 61000-3-3, EN 61347-1, EN 61347-2-13, EN 61547, EN 61000-4-4, EN 61000-4-5

Specific technical data

Type	Output current④	Min. output voltage	Max. output voltage	Max. output power	Typ. power consumption (at 230 V, 50 Hz, full load)	Typ. current consumption (at 230 V, 50 Hz, full load)	tc point max.	Ambient temperature ta	I-out select
LC 34/650-800/42 flexC T-B SNC3	650 mA	24 V	42 V	27.3 W	31.5 W	145 mA	60 °C	-20 … +35 °C	1=off / 2=off
LC 34/650-800/42 flexC T-B SNC3	700 mA	24 V	42 V	29.4 W	33.5 W	155 mA	60 °C	-20 … +35 °C	1=off / 2=on
LC 34/650-800/42 flexC T-B SNC3	750 mA	24 V	42 V	31.5 W	36.5 W	165 mA	65 °C	-20 … +35 °C	1=on / 2=off
LC 34/650-800/42 flexC T-B SNC3	800 mA	24 V	42 V	33.6 W	39.0 W	170 mA	65 °C	-20 … +35 °C	1=on / 2=on
LC 34/650-800/42 flexC T-W SNC3	650 mA	24 V	42 V	27.3 W	31.5 W	145 mA	60 °C	-20 … +35 °C	1=off / 2=off
LC 34/650-800/42 flexC T-W SNC3	700 mA	24 V	42 V	29.4 W	33.5 W	155 mA	60 °C	-20 … +35 °C	1=off / 2=on
LC 34/650-800/42 flexC T-W SNC3	750 mA	24 V	42 V	31.5 W	36.5 W	165 mA	65 °C	-20 … +35 °C	1=on / 2=off
LC 34/650-800/42 flexC T-W SNC3	800 mA	24 V	42 V	33.6 W	39.0 W	170 mA	65 °C	-20 … +35 °C	1=on / 2=on
LC 34/650-800/42 flexC T-G SNC3	650 mA	24 V	42 V	27.3 W	31.5 W	145 mA	60 °C	-20 … +35 °C	1=off / 2=off
LC 34/650-800/42 flexC T-G SNC3	700 mA	24 V	42 V	29.4 W	33.5 W	155 mA	60 °C	-20 … +35 °C	1=off / 2=on
LC 34/650-800/42 flexC T-G SNC3	750 mA	24 V	42 V	31.5 W	36.5 W	165 mA	65 °C	-20 … +35 °C	1=on / 2=off
LC 34/650-800/42 flexC T-G SNC3	800 mA	24 V	42 V	33.6 W	39.0 W	170 mA	65 °C	-20 … +35 °C	1=on / 2=on

① Maximum of "perception and reaction" and "let go" values according to EN 60598-1.
② Test result at 25 °C.
③ Test result at max. current.
④ Output current is mean value.

ACU ALU NIPPLE M10x8

Accessory

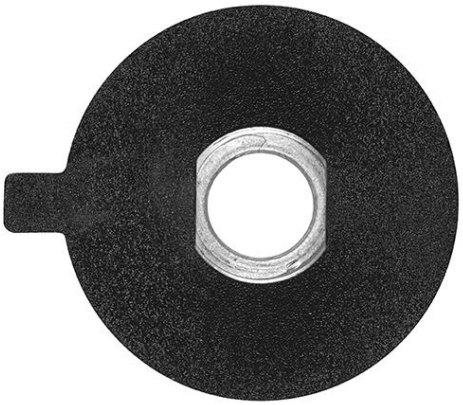

Product description

- Optional threaded sleeve for luminaire mounting
- Suitable for M10x8 mm threaded nut
- We suggest to use mechanical way(screw) to assemble the nipple and track light fixure, use glue may have potential risk to change the material charactoristics and destroy the plastic gasket and the nipple.

Website
http://www.tridonic.com/28005589

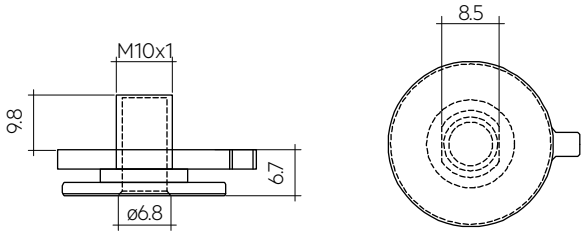

Ordering data

Type	Article number	Weight per pc.
ACU ALU NIPPLE M10x8 BK	**28005589**	0.243 kg
ACU ALU NIPPLE M10x8 WH	**28005590**	0.005 kg
ACU ALU NIPPLE M10x8 GR	**28005591**	0.005 kg

1. Standards

EN 55015
EN 61000-3-2
EN 61000-3-3
EN 61347-1
EN 61347-2-13
EN 61547
EN 61000-4-4
EN 61000-4-5

1.1 Glow-wire test

According to EN 61347-1 with increased temperature of 850 °C passed.

2. Thermal details and lifetime

2.1 Expected lifetime

Expected lifetime

Type	Output current	ta	25 °C	35 °C
LC 34/650-800/42 flexC T SNC3	650 mA	Lifetime	> 100,000 h	> 50,000 h
	700 mA	Lifetime	> 100,000 h	> 50,000 h
	750 mA	Lifetime	> 100,000 h	> 50,000 h
	800 mA	Lifetime	> 100,000 h	> 50,000 h

The LED drivers are designed for a lifetime stated above under reference conditions and with a failure probability of less than 10 %.

Temperatures were measured with Tracktype PRO-310 from manufacturer powergear. Temperatures can deviate with tracks from other manufacturers.

3. Installation / wiring

3.1 Circuit diagram

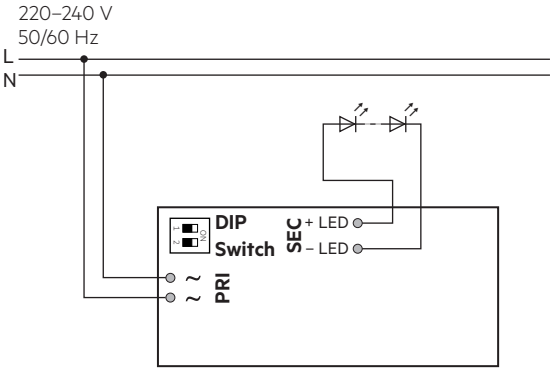

3.2 Wiring type and cross section

For wiring use stranded wire with ferrules or solid wire from 0.5–1.5 mm².
Strip 8.5–9.5 mm of insulation from the cables to ensure perfect operation of the push-wire terminals.
Use one wire for each terminal connector only.

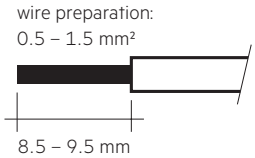

3.3 Release of the wiring

Press down the “push button” and remove the cable from front.

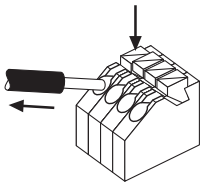

3.4 Fixing conditions

Dry, acidfree, oilfree, fatfree. It is not allowed to exceed the maximum ambient temperature (ta) stated on the device.

3.5 Wiring guidelines

- All connections must be kept as short as possible to ensure good EMI behaviour.
- Max. length of output wires is 20 cm.
- Secondary switching is not permitted.
- Incorrect wiring can demage LED modules.
- To avoid damage of the Driver, the wiring must be protected against short circuits to earth (sharp edged metal parts, metal cable clips, louver, etc.).

3.6 Replace LED module

1. Mains off
2. Remove LED module
3. Wait for 30 seconds
4. Connect LED module again

Hot plug-in or secondary switching of LEDs is not permitted and may cause a very high current to the LEDs.

3.7 Mounting luminaire

Max. allowed weight of complete luminaire: 5 kg (50 N)

3.8 Compatible tracks

Subject to be changed without notice.

Manufacturer	Type	System	Intrack casing colour
EUTRAC	25-XX-XX / 26-XX-XX	3P	Black, white, grey
IVELA	7501 / 7511 / 7512	3P	Black, white, grey
NORDIC ALUMINIUM	GLOBAL Trac Pro XTS 4xxx	3P	Black, white, grey
NORDIC ALUMINIUM	GLOBAL Trac Pro XTSF 4xxx	3P	Black, white, grey
Stucchi	One track	3P	Black, white, grey
Powergear	PRO-04X0	3P	Black, white, grey

Tests have been done with in-tracks taken from the market in the first half of 2020.

Tridonic has no control or responibility on any future or past possible changes made by different manufactures that could affect the compatiblity between tracks and adapters.

3.9 Adapter mounting into the track

Insert the adapter into the track, so that the mechanical key (A) in the adaptor matches the groove (B) in the track. Rotate of about 90° the lever of the cam (C) until it reachs the locking position.
To open rotate the lever the opposite direction.

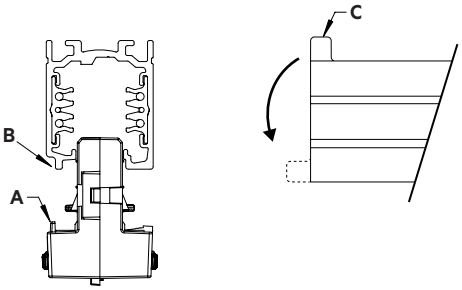

3.10 Phase selection

When the track is connected to a three-phase system it is possible to select the phase (L1, L2 or L3) to distribute the single luminaires in the system, by means of the proper selector of the adaptor.

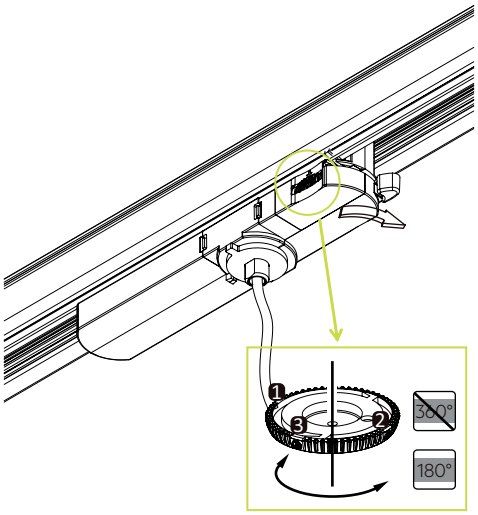

3.11 Current setting

Set the current by DIP switch after mains off.
Use of DIP switch only after mains off.

650 mA: Switch 1 = Off, Switch 2 = Off

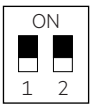

700 mA: Switch 1 = Off, Switch 2 = On

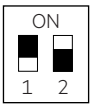

750 mA: Switch 1 = On, Switch 2 = Off

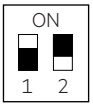

800 mA: Switch 1 = On, Switch 2 = On

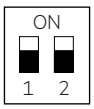

4. Electrical values

4.1 Efficiency vs load

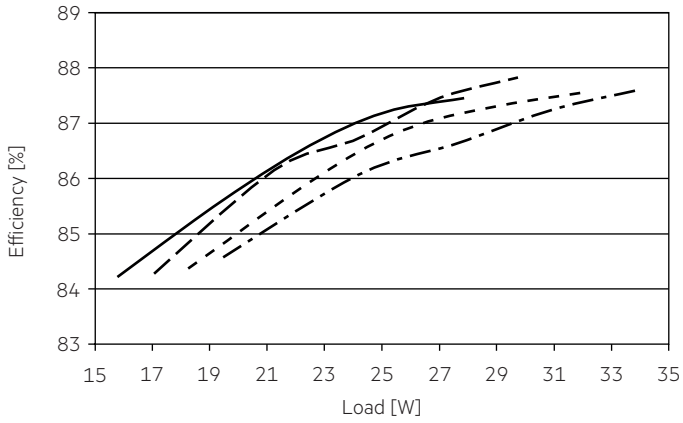

4.2 Power factor vs load

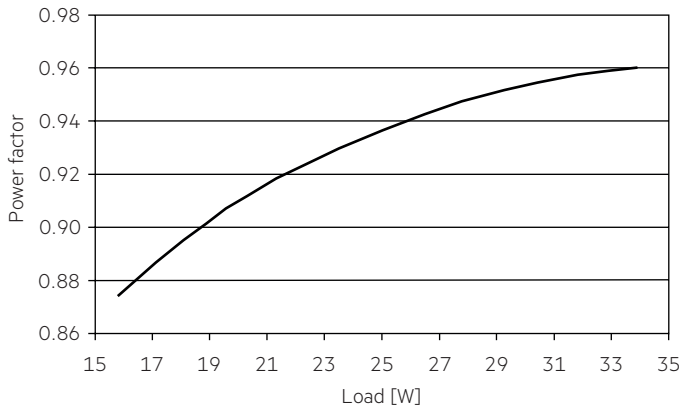

4.3 THD vs load

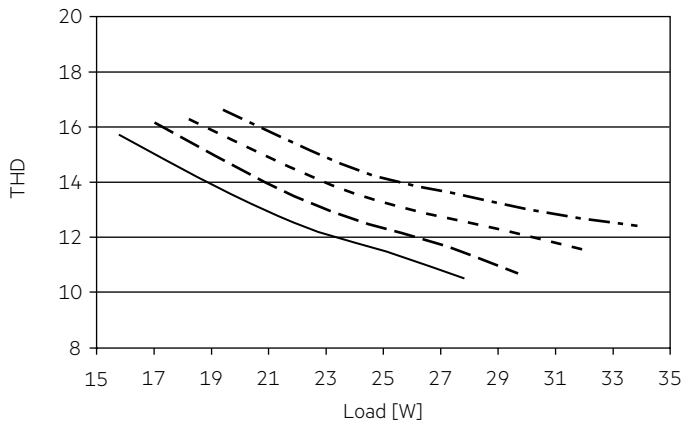

650 mA
700 mA
750 mA
800 mA

4.6 Maximum loading of automatic circuit breakers in relation to inrush current

Automatic circuit breaker type	C10	C13	C16	C20	B10	B13	B16	B20	Inrush current	
Installation Ø	1.5 mm²	1.5 mm²	2.5 mm²	2.5 mm²	1.5 mm²	1.5 mm²	2.5 mm²	2.5 mm²	I_{max}	Time
LC 34/650-800/42 flexC T SNC3	45	60	75	95	45	60	75	95	4 A	50 µs

These are max. values calculated out of inrush current! Please consider not to exceed the maximum rated continuous current of the circuit breaker.
Calculation uses typical values from ABB series S200 as a reference.
Actual values may differ due to used circuit breaker types and installation environment.

4.7 Harmonic distortion in the mains supply (at 230 V / 50 Hz and full load) in %

	THD	3.	5.	7.	9.	11.
LC 34/650-800/42 flexC T SNC3	< 15	< 15	< 10	< 5	< 5	< 3

5. Functions

5.1 Short-circuit behaviour

In case of a short circuit on the secondary side (LED) the LED driver switches off. After elimination of the short-circuit fault the LED driver will recover automatically.

5.2 No-load operation

The LED driver works in burst working mode to provide a constant output voltage regulation which allows the application to be able to work safely when LED string opens due to a failure.

5.3 Overload protection

If the maximum load is exceeded by a defined internal limit, the LED driver will protect itself and LED may flicker. After elimination of the overload the nominal operation will recover automatically.

6. Miscellaneous

6.1 Insulation and electric strength testing of luminaires

Electronic devices can be damaged by high voltage. This has to be considered during the routine testing of the luminaires in production.

According to IEC 60598-1 Annex Q (informative only!) or ENEC 303-Annex A, each luminaire should be submitted to an insulation test with 500 V DC for 1 second. This test voltage should be connected between the interconnected phase and neutral terminals and the earth terminal.
The insulation resistance must be at least 2 MΩ.

As an alternative, IEC 60598-1 Annex Q describes a test of the electrical strength with 1500 V AC (or 1.414 x 1500 V DC). To avoid damage to the electronic devices this test must not be conducted.

6.2 Conditions of use and storage

Humidity: 5 % up to max. 85 %,
not condensed
(max. 56 days/year at 85 %)

Storage temperature: -40 °C up to max. +80 °C

The devices have to be within the specified temperature range (ta) before they can be operated.

6.3 Maximum number of switching cycles

All LED driver are tested with 50,000 switching cycles.

6.4 Additional information

Additional technical information at www.tridonic.com → Technical Data

Lifetime declarations are informative and represent no warranty claim.
No warranty if device was opened.