A.A.G. STUCCHI s.r.l. u.s
Via IV Novembre 30/32
23854 Olginate (LC)
www.aagstucchi.it
info@aagstucchi.it

CLIC SPOT F41 CORE11 / *CLIC SPOT F41 CORE11*

PRODUCT CODE / *CODICE PRODOTTO*

F41/B5-A-0-C

DESCRIPTION / *DESCRIZIONE*

48V spot. For 9600C CORE11 tracks. Aluminum body. PMMA Lens 18°. Ø41x176mm.

48V spot. For 9600C CORE11 tracks. Aluminum body. PMMA Lens 18°. Ø41x176mm.

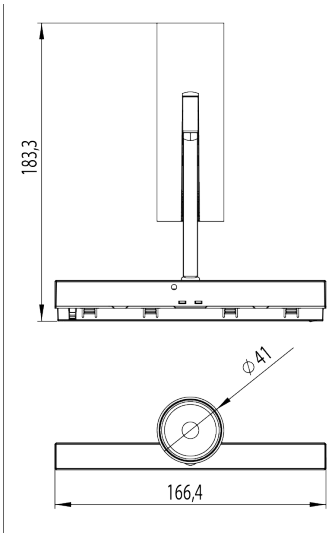

TECHNICAL DATA / *DATI TECNICI*

Application	ON TRACK
Real Flux(lm)	730.31
Nominal Flux(lm)	950.6
Real Power(W)	9.1
Efficiency(lm / W)	80.3
LED source	LED
Colour Temperature(K)	3000
CRI	90
MacAdam	≤ 3
Beam Angle	17,4°
UGR	≤ 16
Lifetime(Khr)	>60Khr L85B5
Driver	ON-OFF
VF	~ 35
I LED(mA)	250
L(mm)	0
Weight(g)	212
Materials	Aluminium body + PMMA lens + polycarbonate antiglare
Colour	Nero
Mounting	Mechanical
Packaging	Cardboard box

X=4H Y=8H		S=0.25H
Reflection factors:		70/50/20
UGR transversal:		14.2
UGR axial:		14.2

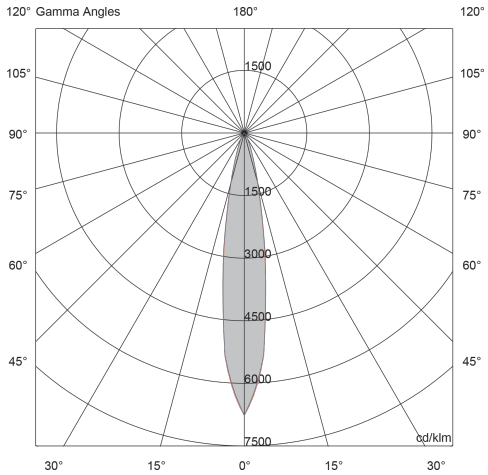

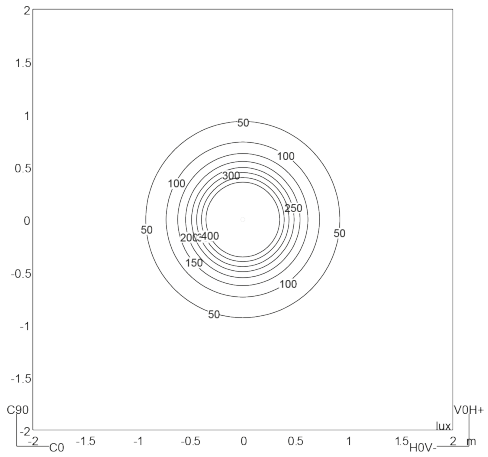

Certifications / *Certificazioni*

Technical info / *Info tecniche*

48V | IP20

Other colour temperatures and CRI available upon request. All values marked with an (*) are rated values. Unless stated otherwise, the values apply to an ambient temperature of 25°C.
Luminous flux is subject to a normal technology drop over time. A.A.G. Stucchi reserves the right to make technical changes without prior notice. Real power: ±10% tolerance

Other colour temperatures and CRI available upon request. All values marked with an (*) are rated values. Unless stated otherwise, the values apply to an ambient temperature of 25°C.
Luminous flux is subject to a normal technology drop over time. A.A.G. Stucchi reserves the right to make technical changes without prior notice. Real power: ±10% tolerance

A.A.G. STUCCHI s.r.l. u.s
Via IV Novembre 30/32
23854 Olginate (LC)
www.aagstucchi.it
info@aagstucchi.it

CLIC SPOT F41 CORE11 / *CLIC SPOT F41 CORE11*

PRODUCT CODE / *CODICE PRODOTTO*

F41/B5-A-2-C

DESCRIPTION / *DESCRIZIONE*

48V spot. For 9600C CORE11 tracks. Aluminum body. PMMA Lens 18°. Ø41x176mm.

48V spot. For 9600C CORE11 tracks. Aluminum body. PMMA Lens 18°. Ø41x176mm.

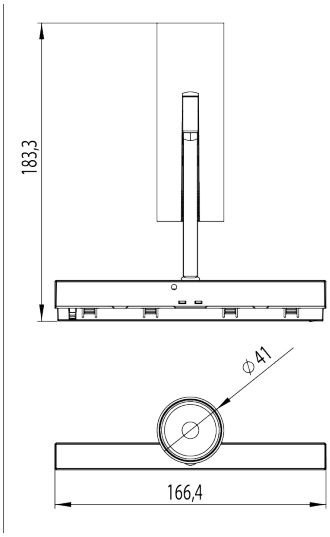

Certifications / *Certificazioni*

Technical info / *Info tecniche*

48V | IP20

Other colour temperatures and CRI available upon request. All values marked with an (*) are rated values. Unless stated otherwise, the values apply to an ambient temperature of 25°C.
Luminous flux is subject to a normal technology drop over time. A.A.G. Stucchi reserves the right to make technical changes without prior notice. Real power: ±10% tolerance

Other colour temperatures and CRI available upon request. All values marked with an (*) are rated values. Unless stated otherwise, the values apply to an ambient temperature of 25°C.
Luminous flux is subject to a normal technology drop over time. A.A.G. Stucchi reserves the right to make technical changes without prior notice. Real power: ±10% tolerance

TECHNICAL DATA / *DATI TECNICI*

Application	ON TRACK
Real Flux(lm)	730.31
Nominal Flux(lm)	950.6
Real Power(W)	9.1
Efficiency(lm / W)	80.3
LED source	LED
Colour Temperature(K)	3000
CRI	90
MacAdam	≤ 3
Beam Angle	17,4°
UGR	≤ 16
Lifetime(Khr)	>60Khr L85B5
Driver	DALI 2
VF	~ 35
I LED(mA)	250
L(mm)	0
Weight(g)	218
Materials	Aluminium body + PMMA lens + polycarbonate antiglare
Colour	Nero
Mounting	Mechanical
Packaging	Cardboard box

	X=4H Y=8H	S=0.25H
	Reflection factors:	70/50/20
	UGR transversal:	14.2
	UGR axial:	14.2

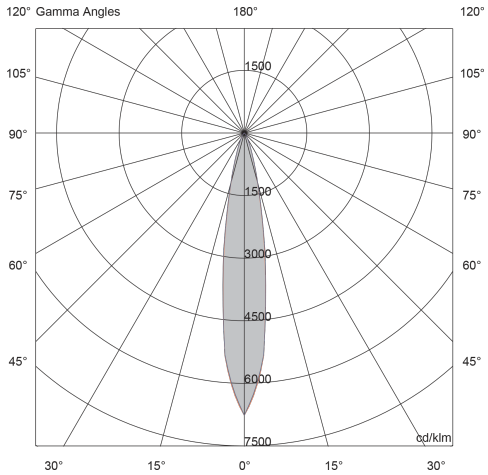

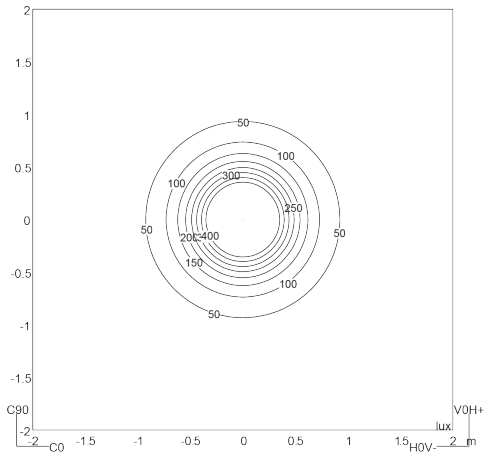

A.A.G. STUCCHI s.r.l. u.s
Via IV Novembre 30/32
23854 Olginate (LC)
www.aagstucchi.it
info@aagstucchi.it

CLIC SPOT F41 CORE11 / *CLIC SPOT F41 CORE11*

PRODUCT CODE / *CODICE PRODOTTO*

F41/B5-A-5-C

DESCRIPTION / *DESCRIZIONE*

48V spot. For 9600C CORE11 tracks. Aluminum body. PMMA Lens 18°. Ø41x176mm.

48V spot. For 9600C CORE11 tracks. Aluminum body. PMMA Lens 18°. Ø41x176mm.

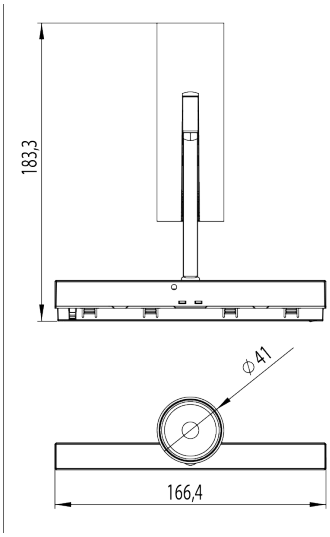

TECHNICAL DATA / *DATI TECNICI*

Application	ON TRACK
Real Flux(lm)	730.31
Nominal Flux(lm)	950.6
Real Power(W)	9.1
Efficiency(lm / W)	80.3
LED source	LED
Colour Temperature(K)	3000
CRI	90
MacAdam	≤ 3
Beam Angle	17,4°
UGR	≤ 16
Lifetime(Khr)	>60Khr L85B5
Driver	CASAMBI
VF	~ 35
I LED(mA)	250
L(mm)	0
Weight(g)	215
Materials	Aluminium body + PMMA lens + polycarbonate antiglare
Colour	Nero
Mounting	Mechanical
Packaging	Cardboard box

X=4H Y=8H		S=0.25H
Reflection factors:		70/50/20
UGR transversal:		14.2
UGR axial:		14.2

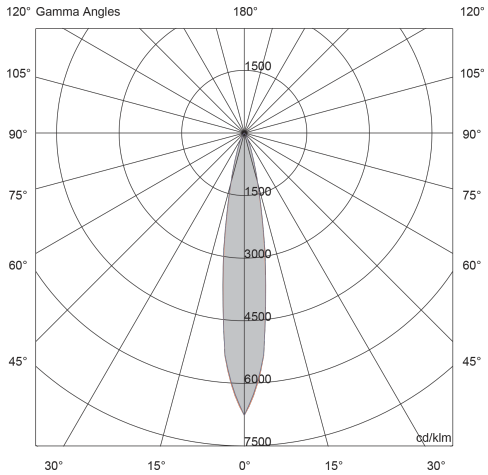

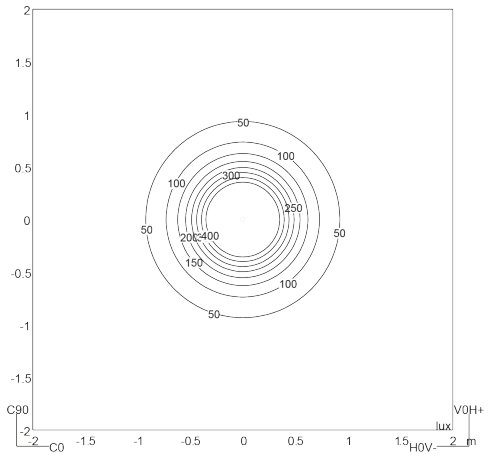

Certifications / *Certificazioni*

Technical info / *Info tecniche*

48V IP20

Other colour temperatures and CRI available upon request. All values marked with an (*) are rated values. Unless stated otherwise, the values apply to an ambient temperature of 25°C.
Luminous flux is subject to a normal technology drop over time. A.A.G. Stucchi reserves the right to make technical changes without prior notice. Real power: ±10% tolerance

Other colour temperatures and CRI available upon request. All values marked with an (*) are rated values. Unless stated otherwise, the values apply to an ambient temperature of 25°C.
Luminous flux is subject to a normal technology drop over time. A.A.G. Stucchi reserves the right to make technical changes without prior notice. Real power: ±10% tolerance

A.A.G. STUCCHI s.r.l. u.s
Via IV Novembre 30/32
23854 Olginate (LC)
www.aagstucchi.it
info@aagstucchi.it

CLIC SPOT F41 CORE11 / *CLIC SPOT F41 CORE11*

PRODUCT CODE / *CODICE PRODOTTO*

F41/B5-A-9-C

DESCRIPTION / *DESCRIZIONE*

48V spot. For 9600C CORE11 tracks. Aluminum body. PMMA Lens 18°. Ø41x176mm.

48V spot. For 9600C CORE11 tracks. Aluminum body. PMMA Lens 18°. Ø41x176mm.

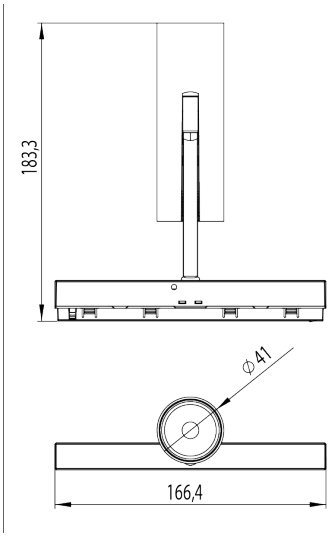

TECHNICAL DATA / *DATI TECNICI*

Application	ON TRACK
LED source	LED
Colour Temperature(K)	3000
CRI	90
MacAdam	≤ 3
Beam Angle	17,4°
UGR	≤ 16 — X=4H Y=8H S=0.25H; Reflection factors: 70/50/20
Driver	NO DRIVER
L(mm)	0
Weight(g)	205
Materials	Aluminium body + PMMA lens + polycarbonate antiglare
Colour	Nero
Mounting	Mechanical
Packaging	Cardboard box

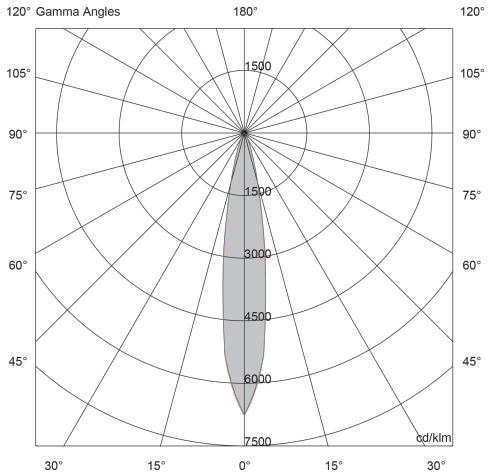

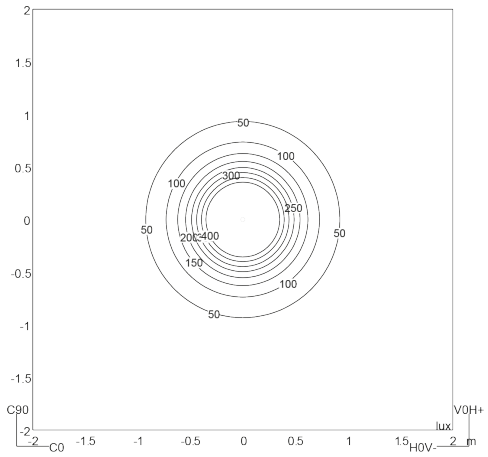

Technical info / *Info tecniche*

48V | IP20

Other colour temperatures and CRI available upon request. All values marked with an (*) are rated values. Unless stated otherwise, the values apply to an ambient temperature of 25°C.
Luminous flux is subject to a normal technology drop over time. A.A.G. Stucchi reserves the right to make technical changes without prior notice. Real power: ±10% tolerance

Other colour temperatures and CRI available upon request. All values marked with an (*) are rated values. Unless stated otherwise, the values apply to an ambient temperature of 25°C.
Luminous flux is subject to a normal technology drop over time. A.A.G. Stucchi reserves the right to make technical changes without prior notice. Real power: ±10% tolerance

A.A.G. STUCCHI s.r.l. u.s
Via IV Novembre 30/32
23854 Olginate (LC)
www.aagstucchi.it
info@aagstucchi.it

CLIC SPOT F41 CORE11 / *CLIC SPOT F41 CORE11*

PRODUCT CODE / *CODICE PRODOTTO*

F41/W25-A-0-C

DESCRIPTION / *DESCRIZIONE*

48V spot. For 9600C CORE11 tracks. Aluminum body. PMMA Lens 18°. Ø41x176mm.

48V spot. For 9600C CORE11 tracks. Aluminum body. PMMA Lens 18°. Ø41x176mm.

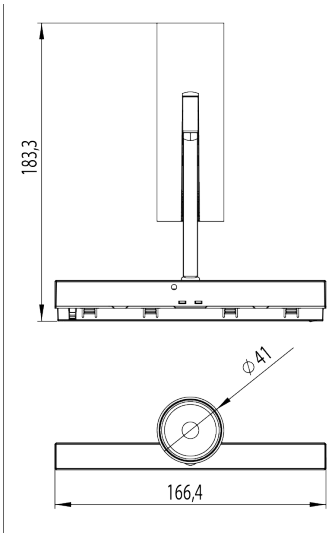

Certifications / *Certificazioni*

Technical info / *Info tecniche*

48V | IP20

Other colour temperatures and CRI available upon request. All values marked with an (*) are rated values. Unless stated otherwise, the values apply to an ambient temperature of 25°C.
Luminous flux is subject to a normal technology drop over time. A.A.G. Stucchi reserves the right to make technical changes without prior notice. Real power: ±10% tolerance

Other colour temperatures and CRI available upon request. All values marked with an (*) are rated values. Unless stated otherwise, the values apply to an ambient temperature of 25°C.
Luminous flux is subject to a normal technology drop over time. A.A.G. Stucchi reserves the right to make technical changes without prior notice. Real power: ±10% tolerance

TECHNICAL DATA / *DATI TECNICI*

Application	ON TRACK
Real Flux(lm)	730.31
Nominal Flux(lm)	950.6
Real Power(W)	9.1
Efficiency(lm / W)	80.3
LED source	LED
Colour Temperature(K)	3000
CRI	90
MacAdam	≤ 3
Beam Angle	17,4°
UGR	≤ 16
Lifetime(Khr)	>60Khr L85B5
Driver	ON-OFF
VF	~ 35
I LED(mA)	250
L(mm)	0
Weight(g)	212
Materials	Aluminium body + PMMA lens + polycarbonate antiglare
Colour	Bianco
Mounting	Mechanical
Packaging	Cardboard box

≤ 16	X=4H Y=8H	S=0.25H
	Reflection factors:	70/50/20
	UGR transversal:	14.2
	UGR axial:	14.2

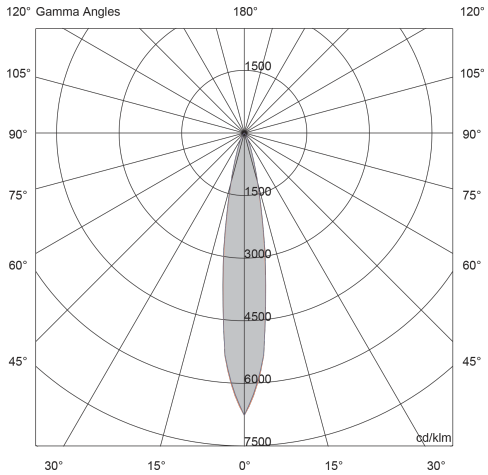

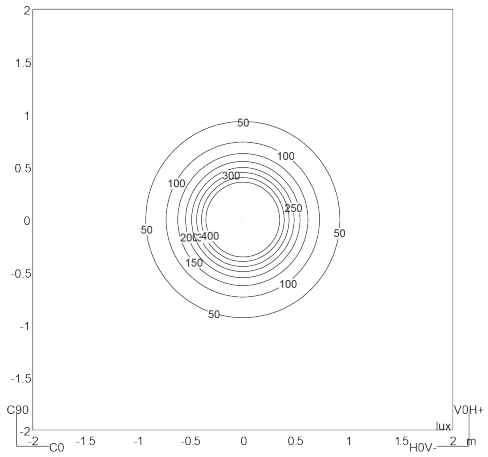

A.A.G. STUCCHI s.r.l. u.s
Via IV Novembre 30/32
23854 Olginate (LC)
www.aagstucchi.it
info@aagstucchi.it

CLIC SPOT F41 CORE11 / *CLIC SPOT F41 CORE11*

PRODUCT CODE / *CODICE PRODOTTO*

F41/W25-A-2-C

DESCRIPTION / *DESCRIZIONE*

48V spot. For 9600C CORE11 tracks. Aluminum body. PMMA Lens 18°. Ø41x176mm.

48V spot. For 9600C CORE11 tracks. Aluminum body. PMMA Lens 18°. Ø41x176mm.

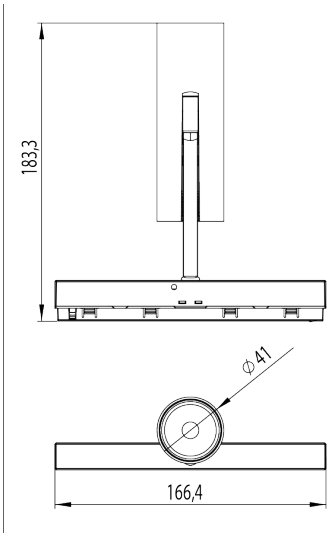

Certifications / *Certificazioni*

Technical info / *Info tecniche*

48V | IP20

Other colour temperatures and CRI available upon request. All values marked with an (*) are rated values. Unless stated otherwise, the values apply to an ambient temperature of 25°C.
Luminous flux is subject to a normal technology drop over time. A.A.G. Stucchi reserves the right to make technical changes without prior notice. Real power: ±10% tolerance

Other colour temperatures and CRI available upon request. All values marked with an (*) are rated values. Unless stated otherwise, the values apply to an ambient temperature of 25°C.
Luminous flux is subject to a normal technology drop over time. A.A.G. Stucchi reserves the right to make technical changes without prior notice. Real power: ±10% tolerance

TECHNICAL DATA / *DATI TECNICI*

Application	ON TRACK
Real Flux(lm)	730.31
Nominal Flux(lm)	950.6
Real Power(W)	9.1
Efficiency(lm / W)	80.3
LED source	LED
Colour Temperature(K)	3000
CRI	90
MacAdam	≤ 3
Beam Angle	17,4°
UGR	≤ 16
Lifetime(Khr)	>60Khr L85B5
Driver	DALI 2
VF	~ 35
I LED(mA)	250
L(mm)	0
Weight(g)	218
Materials	Aluminium body + PMMA lens + polycarbonate antiglare
Colour	Bianco
Mounting	Mechanical
Packaging	Cardboard box

≤ 16	X=4H Y=8H	S=0.25H
	Reflection factors:	70/50/20
	UGR transversal:	14.2
	UGR axial:	14.2

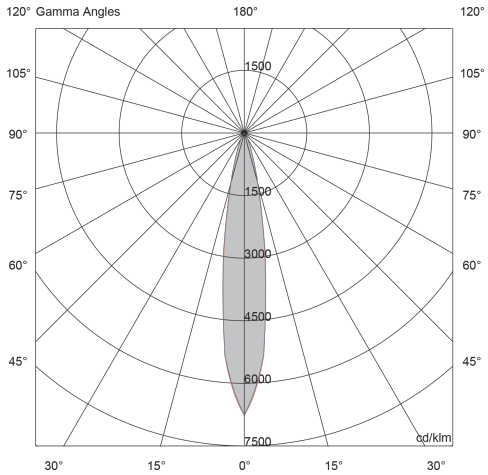

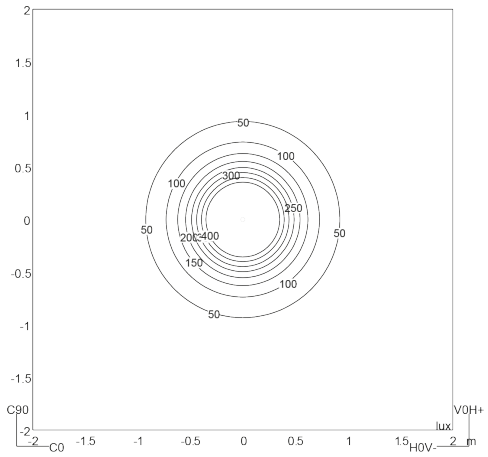

A.A.G. STUCCHI s.r.l. u.s
Via IV Novembre 30/32
23854 Olginate (LC)
www.aagstucchi.it
info@aagstucchi.it

CLIC SPOT F41 CORE11 / *CLIC SPOT F41 CORE11*

PRODUCT CODE / *CODICE PRODOTTO*

F41/W25-A-5-C

DESCRIPTION / *DESCRIZIONE*

48V spot. For 9600C CORE11 tracks. Aluminum body. PMMA Lens 18°. Ø41x176mm.

48V spot. For 9600C CORE11 tracks. Aluminum body. PMMA Lens 18°. Ø41x176mm.

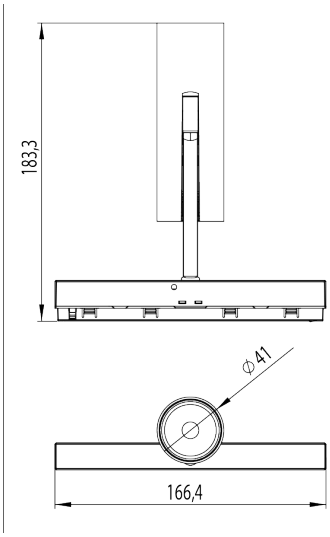

Certifications / *Certificazioni*

Technical info / *Info tecniche*

48V | IP20

Other colour temperatures and CRI available upon request. All values marked with an (*) are rated values. Unless stated otherwise, the values apply to an ambient temperature of 25°C.
Luminous flux is subject to a normal technology drop over time. A.A.G. Stucchi reserves the right to make technical changes without prior notice. Real power: ±10% tolerance

Other colour temperatures and CRI available upon request. All values marked with an (*) are rated values. Unless stated otherwise, the values apply to an ambient temperature of 25°C.
Luminous flux is subject to a normal technology drop over time. A.A.G. Stucchi reserves the right to make technical changes without prior notice. Real power: ±10% tolerance

TECHNICAL DATA / *DATI TECNICI*

Application	ON TRACK
Real Flux(lm)	730.31
Nominal Flux(lm)	950.6
Real Power(W)	9.1
Efficiency(lm / W)	80.3
LED source	LED
Colour Temperature(K)	3000
CRI	90
MacAdam	≤ 3
Beam Angle	17,4°
UGR	≤ 16
Lifetime(Khr)	>60Khr L85B5
Driver	CASAMBI
VF	~ 35
I LED(mA)	250
L(mm)	0
Weight(g)	215
Materials	Aluminium body + PMMA lens + polycarbonate antiglare
Colour	Bianco
Mounting	Mechanical
Packaging	Cardboard box

X=4H Y=8H	S=0.25H	
Reflection factors:	70/50/20	
UGR transversal:	14.2	
UGR axial:	14.2	

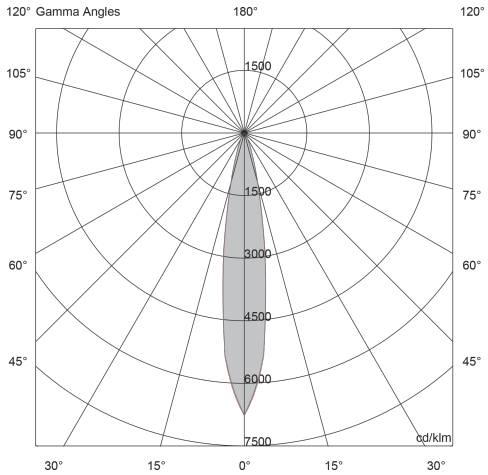

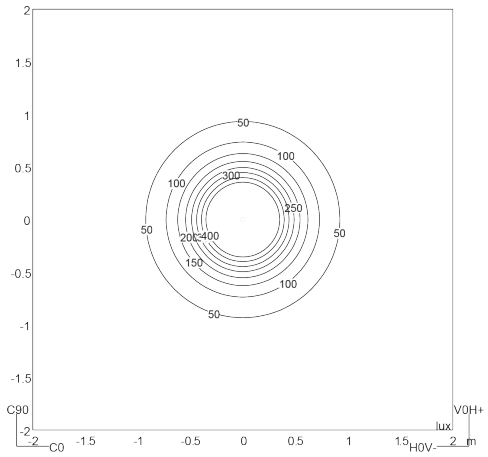

A.A.G. STUCCHI s.r.l. u.s
Via IV Novembre 30/32
23854 Olginate (LC)
www.aagstucchi.it
info@aagstucchi.it

CLIC SPOT F41 CORE11 / *CLIC SPOT F41 CORE11*

PRODUCT CODE / *CODICE PRODOTTO*

F41/W25-A-9-C

DESCRIPTION / *DESCRIZIONE*

48V spot. For 9600C CORE11 tracks. Aluminum body. PMMA Lens 18°. Ø41x176mm.

48V spot. For 9600C CORE11 tracks. Aluminum body. PMMA Lens 18°. Ø41x176mm.

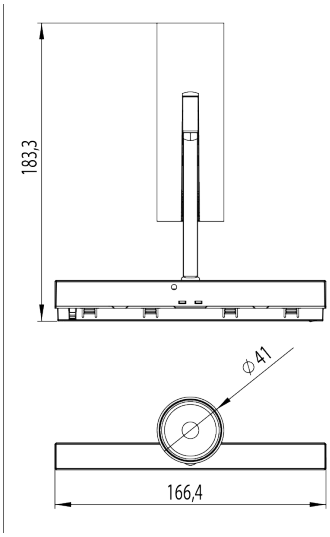

Technical info / *Info tecniche*

48V | IP20

Other colour temperatures and CRI available upon request. All values marked with an (*) are rated values. Unless stated otherwise, the values apply to an ambient temperature of 25°C.
Luminous flux is subject to a normal technology drop over time. A.A.G. Stucchi reserves the right to make technical changes without prior notice. Real power: ±10% tolerance

Other colour temperatures and CRI available upon request. All values marked with an (*) are rated values. Unless stated otherwise, the values apply to an ambient temperature of 25°C.
Luminous flux is subject to a normal technology drop over time. A.A.G. Stucchi reserves the right to make technical changes without prior notice. Real power: ±10% tolerance

TECHNICAL DATA / *DATI TECNICI*

Application	ON TRACK
LED source	LED
Colour Temperature(K)	3000
CRI	90
MacAdam	≤ 3
Beam Angle	17,4°
UGR	≤ 16 — X=4H Y=8H S=0.25H; Reflection factors: 70/50/20
Driver	NO DRIVER
L(mm)	0
Weight(g)	205
Materials	Aluminium body + PMMA lens + polycarbonate antiglare
Colour	Bianco
Mounting	Mechanical
Packaging	Cardboard box

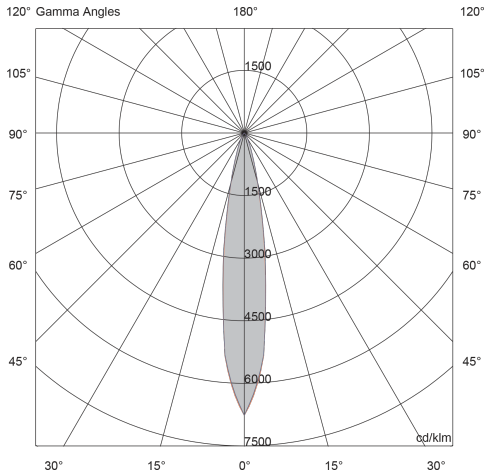

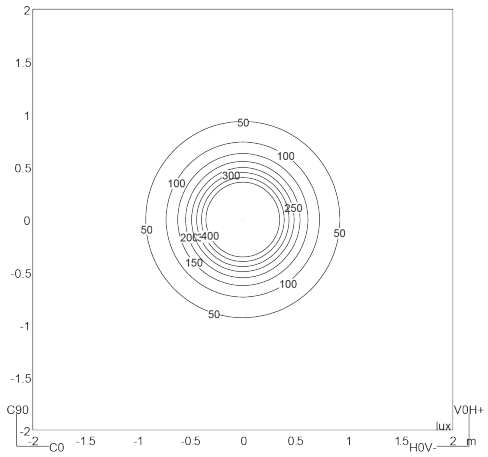

Room (m): 4x4x3h H luminaire (m): 2,5 Ref. surface: floor